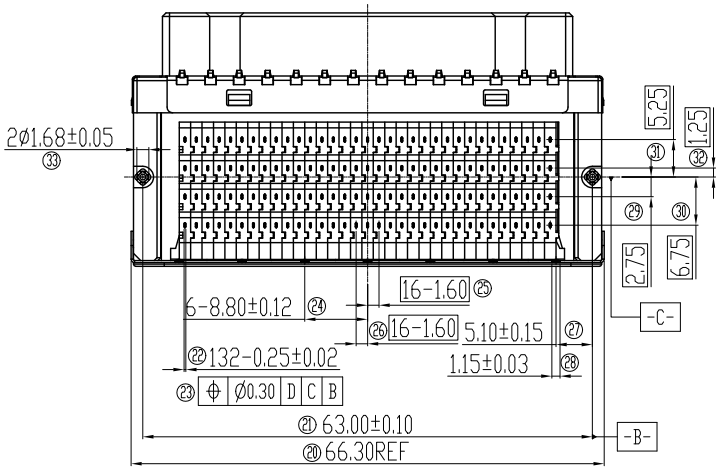

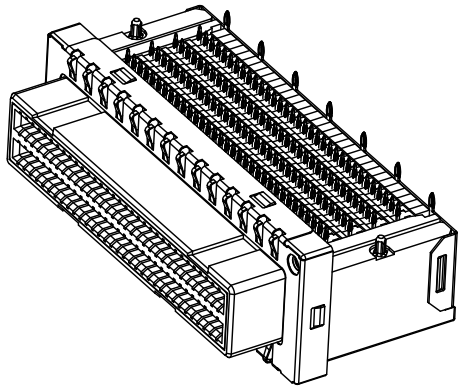

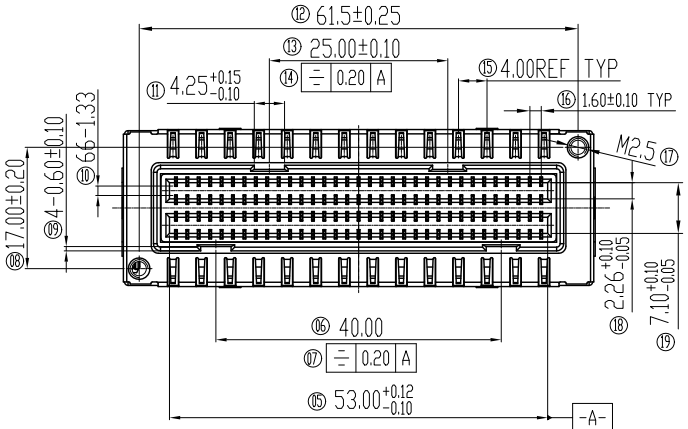

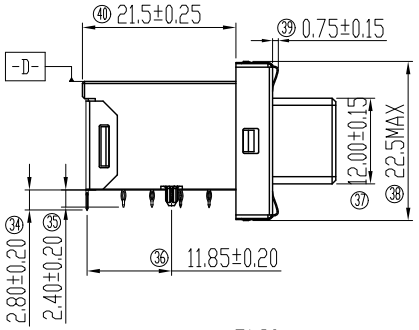

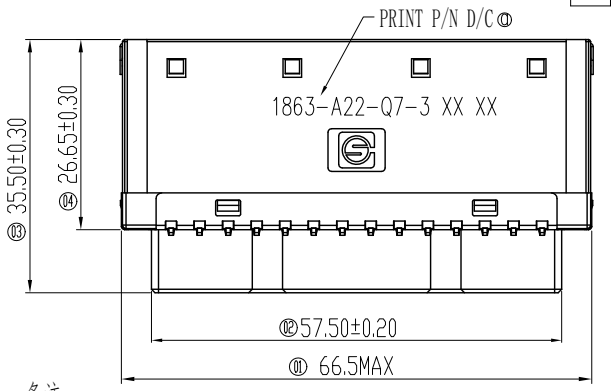

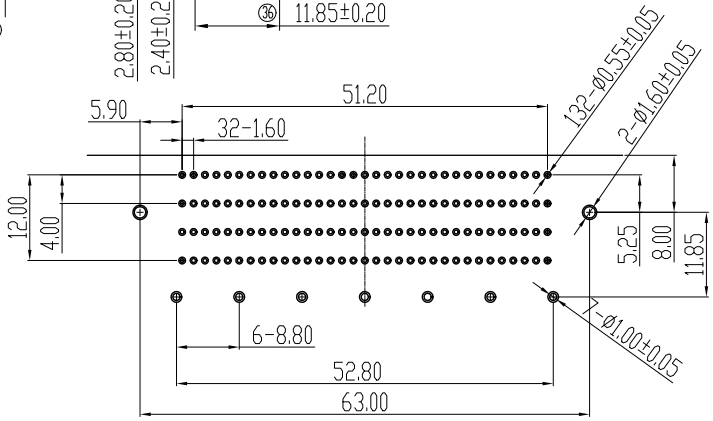

Recomend PCB Layout
Unspecified tolerance: ±0.05

Performance characteristics:

1. Main body part material
   Insulator: LCP BLACK UL94V-0
   Contact terminal: Copper Alloy, Ni 1.27μm Underplated over all.
   mate area plating Au0.38μm, Sn plating at tail
   SHELL: Zinc Alloy, plating Ni.
   EMI SHELL: Stainless Steel
2. Electrical requirements:
   CURRENT RATING: 0.5A
   Voltage rating: 48V
   Contact resistance: ≤50 mΩ △10mΩ
   Insulation resistance: ≥1000 MΩ
   Withstanding voltage: Pin to Pin 1000 Vr.m.s, 1mA, 60s.
   Pin to Ground 1500 Vr.m.s, 1mA, 60s.
3. MECHANICAL REQUIREMENTS
   Insertion force: ≤120 N
   Extraction force: ≥30 N
   Mechanical life: 200 CYCLES
4. Environment specification
   Working temperature: -55℃～+85℃
5. Packing & storing
   Method of packing: tray, BOX
   Storing condition: temperature of -10℃～+40℃
   below 80% relative humidity
6. Style of installation: Press fit installation
7. To prevent the pollution of the environment product info
   RoHS agreement: In line with the european union RoHS

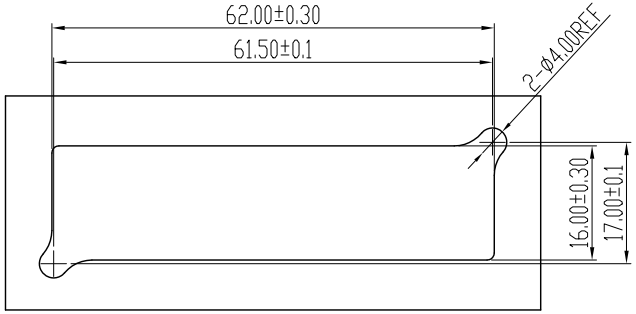

Recomend PANEL CUTOUT Dimension

备注:
1. 2.26+0.10/-0.05, 7.10+0.10/-0.05尺寸如因翘曲变形导致测量超规，
   可使用上根限尺寸PLUG舌片Gauge实配检验，确认插拔力在规格内可判定OK.
2. PCB引脚相关尺寸过板检验，保证PCB压接功能正常

Unless otherwise specified tolerance:

X.	±0.50	X.°	±3°
.X	±0.38	.X°	±2°
.XX	±0.25		

Mark	NO.	File NO.	Signature	Date
Ⓓ	1	411912	Lawrence	2019-08-26
DRAW		Lawrence 2019.05.08		
CHK		Lawrence 2019.09.29		
MAN				
STD		Juanli lai 2019.09.30		
APP		Alan 2019.09.30		

1.6mm 4*33 Female Right angle Press fit CONN.

1863-A22-Q7-3

SL0.1863.008

Projection	Rev.	Weight	Scale
	A1		

All Dimensions in mm | Sheet 1 of 1

SHINNING SHENZHEN SHINNING ELECTRONIC CO.,LTD.